A Self Sustaining Solar Tracker Using Thermo Responsive Nitinol Actuators

S Jegadeesan
Department of Electronics and Communication Engineering
M.Kumarasamy College of Engineering
Karur - 639113, India
jegadeesans@rediffmail.com

Arun Sekar Rajasekaran
Department of Electronics and Communication Engineering
SR University
Warangal, Telangana 506371, India
rarunsekar007@gmail.com

S Suguna
Department of Electronics and Communication Engineering
M.Kumarasamy College of Engineering
Karur - 639113, India
sugunasubramani05@gmail.com

V Visnupriya
Department of Electronics and Communication Engineering
M.Kumarasamy College of Engineering
Karur - 639113, India
priya08082006@gmail.com

S Yogadharani
Department of Electronics and Communication Engineering
M.Kumarasamy College of Engineering
Karur - 639113, India
s.yogadharani@gmail.com

E Yuvasri
Department of Electronics and Communication Engineering
M.Kumarasamy College of Engineering
Karur - 639113, India
yuvasrisiva2005@gmail.com

***Abstract*—Traditional solar photovoltaic systems are based on fixed-tilt panels which can lose up to 25% of the energy in case the sun is not at the correct angle or motorized tracks, which enhance energy harvesting efficiently but raise the cost, power usage and complexity of maintenance.In order to address these shortcomings, the present work presents a self-sustainable solar tracker that consists of thermo-responsive Nitinol shape memory alloys (SMAs). The proposed system does not require motors or external forms of energy and instead the sun passively warming the SMA bars exert their energy which works to change the position of the panel through a ball-joint pivot. Thermal response and general mechanical stability are further boosted with counterweights and anodized aluminum plates providing consistent tracking throughout a wide-range, 30-70°C. The system has better energy yield, lower operating cost and does not require any auxiliary power as compared to the currently available fixed and motordriven trackers. The passive and environmentally friendly design provides a stable solution to the solar tracking that is sustainable even in remote and off-grid locations.**

***Index Terms*—Solar tracking,Shape memory alloy(SMA),Dual-axis mechanism,Sustainable energy,Ball joint pivot.**

I. Introduction

The growing global trend toward renewable energy has generated more demand in order to maximize the production of solar photovoltaic (PV) systems. Though fixed-tilt panels are popular because of low cost and ease of operation, they can miss up to 25% of potential energy through failure to match the motion of the sun at varying time of the day and seasons [1], [8]. This constant angular error reduces effective capacity factor, especially in places where there is high daily and seasonal changes in sunlight.

To mitigate these losses, motorized solar trackers dynamically adjust panel orientation. Although they generally increase energy capture, they introduce higher system complexity, continuous or intermittent auxiliary power demand, and maintenance costs approaching 35–40%, which limits suitability for low-cost and off-grid deployments [2], [4]. Active servo-based systems further require sensors and control electronics that are susceptible to wear, drift, and environmental stresses [4], while hybrid mechatronic approaches improve accuracy at the expense of added cost and integration overhead [5]. These constraints motivate the search for a sustainable, maintenance-light alternative.

Passive tracking using smart materials has emerged as a promising pathway. In particular, thermo-responsive SMA such as Nitinol can convert solar heat directly into mechanical actuation, enabling autonomous panel reorientation without motors, sensors, or external electrical power [5], [6]. Recent studies report robust strain recovery and improved durability when SMA composition and thermomechanical treatment are properly engineered [6], and data-driven or learning-based models can further enhance prediction and control of SMA response in dynamic environments [7]. In parallel, supporting materials and surface finishes—notably black anodized aluminum and ceramic coatings—improve solar absorptivity and thermal stability, making SMA actuation more reliable over a broad operating range [3], [12]. Unlike bimetallic-strip trackers that are slower and limited in angular excursion, SMA

979-8-3315-7436-9/25/$31.00 © 2025 IEEE

actuators can achieve approximately 5–8% recoverable strain with consistent tracking behavior [6], [9].

Building on these insights, this work proposes a dual-axis SMA-based solar tracker that integrates black anodized aluminum and ceramic-coated elements for stable thermal response, employs a ball-joint mechanism for wide-angle motion, and ensures reliable performance across 30–70°C using optimized Nitinol actuators. The system demonstrates improved energy yield compared to fixed-tilt and bimetallic-strip trackers, while eliminating the need for auxiliary power and reducing maintenance burden. Supported by prior findings [1]–[3], [6], [7], [9], [12], [13], the proposed design offers a viable pathway toward low-cost, efficient, and environmentally friendly solar tracking in remote and off-grid contexts.

II. Literature Review

The attempts to maximize the process of solar energy capture have resulted in significant advances that tracking technologies have achieved. Despite the ongoing popularity of fixed-tilt panels, research in the field has shown that these panels may lose close to 25% of potential energy through imprecise placement with the suns path when it changes daily or with the seasons [1], [8]. Motorized trackers may correct this loss by maintaining proper orientation, but have the disadvantage of requiring more installation complexity, increased energy consumption, and 35-40 times more maintenance than passive designs [2], [10]. To overcome these drawbacks, making passive tracking mechanisms is aimed at minimizing the external input of energy and making systems operation easier. Counterweight-based systems, e.g., give approximately 23% better output in comparison to fixed panels [1], [4]. Nevertheless, they have a limiting adaptability due to the need to be tuned manually or seasonally, that is, by humans. Bimetallic strip systems are self-responsive to temperature changes, but their slowness and limited response range of 15% increase low-uniformity sunlight performance [5], [12]. Another method has been fluid-based actuation, although this is limited by leakage per annum and unreliable heating behaviour in the long term [6]. In comparison with that SMA, especially Nitinol have become powerful alternatives of passive tracking. SMAs have 5% and 8% strain recovery and perform more than 50,000 cycles of endurance, which makes them resilient, strong, and self-driven motors [7]. SMA tracker trials in the field have reported output improvements of up to almost 28 over fixed modules yet with minimal maintenance [2].

Thermal activation is important in the effective performance of SMA in other climates. It has been demonstrated that black anodized aluminum plates and those covered with ceramics, due to their high absorptivity and insulation, maintain activation (range) within 10°C to 70°C [3], [4]. These changes increase the range of SMA use in various environments. Ball-joint pivots, which ensure a range of movement of 45 , even more, are mechanical characteristics that enhance flexibility in tracking [5], [12]. In order to build a more responsive system, it is highlighted that motion prediction and actuation precision should be improved with regard to recent research. Liu et al. [6] used simulation to investigate SMA behavior with respect to applied thermal and mechanical loads, which increased reliability. In the same manner, Sharma and Kumar [7] incorporated Nitinol actuation fine-tuning using artificial neural networks to generate better responses that are more accurate and fast. These are innovations that help in making adaptive and intelligent designs. Whereas positioning accuracy has been a challenge with passive solutions, SMA actuators have provided promising results. In SMAs, sub-millimeter accuracy on closed-loop control was reported by Park and Hwang [11]. In addition, autonomous SMA shading structures have been used with success without involving sensors [12], thus minimizing cost and complexity of the system. On top of this, Vijayakumar et al. [13] examined thermal optimization of solar collectors with the use of nanofluids and heat pipes. Their results are complementary to SMA-based work, as they enhance the heat transfer, which is a key consideration to SMA efficiency. These studies as a whole demonstrate the potential of SMA technology as a green substitute to traditional solar tracking systems.

III. Working Mechanism

The proposed solar tracking system employs SMA bars made of Nitinol, which deform when exposed to heat from solar radiation. These SMA elements are placed at the four corners of the solar panel, which is supported on a ball-joint to enable dual-axis motion. When the black anodized aluminum base plates operating effectively within a temperature range of 40°C to 70°C absorbs sunlight, they transfer heat to the SMA bars. The heated SMA contracts, causing the solar panel to tilt and align with the sun. Counterweights are employed to ensure balanced movement and stable orientation. The SMA wires are coated with ceramic to enhance durability and promote uniform heating. The system employs a passive thermal feedback mechanism to maintain optimal actuation temperatures. Heat variations are sensed and utilized to automatically adjust the panel's position throughout the day: tilting eastward in the morning, leveling at noon, tilting westward in the evening, and returning to a centered position at night.

This configuration eliminates the need for motors, electronics, or external power sources, resulting in a 28.5% increase in solar energy capture. The system offers a low-cost, highly reliable, and maintenance-free solution, particularly suited for rural and off-grid applications.

IV. System Implementation

A. Design and Working Principle

In the solar tracking system,SMA bars are used, which vary in shape with the temperature in order to align the direction of the solar panel with the direction of the sun. The system traps more energy by modulating the inclination of the panel as the sunlight warms the SMA. Mechanical parts, the use of SMA, and the mechanism of working are explained by the subsections below.

B. Mechanical Design of the Tracking System

The frame of the system is powerful and supports the solar panel and allows moving it to several directions. SMA bars are fitted at each corner, thus enabling the panel to tilt in the morning to evening. The design makes the unit stable and smooth moving.

C. Main Components of the Mechanical Design

- **Ball-Joint Pivot:** Allows the panel to swing freely, in order, that the contraction and expansion of the SMA can adjust the tilt.
- **Counterweights:** Compensate the forces of the SMA actuation to maintain the motion constant and uniform.
- **Aluminum Base Plate:** Supports the panel and conducts heat quickly out of the Sun to the SMA bars.
- **SMA Bars (Nitinol):** Cooling down and heating up, they lengthen and shorten and move the panel by themselves.

D. SMA Integration and Mounting

The panel is anchored with four SMA bars (SMA-1 to SMA-4) on its corners to permit the panel to lean in the direction of the heat of the Sun. The frame is provided with heat-resistant supports to which they are fixed. They contract and move the panel when they heat up as desired. The contraction and relaxation times are established in such a way that the tracking is smooth and precise. The SMAs are covered with ceramic to ensure that the system is longer lasting and evenly spreads heat. This guards against the environment and maintains even their temperature.

E. Operating Mechanism

This system is effective as the aluminum base plate warm in the Sun. Heat arrives at the SMA bars and they contract as they warm. This drags the panel towards the Sun. As the panel cools down, the SMA bars tend to relax and the counter-weights assist in restoring balance to everything. The heating and cooling cycle allows the system to monitor the Sun on two planes without any motors or other power.

The system passes through four phases in the day:

F. Solar Tracking Phase in the Morning (6:00 AM - 12:00 PM)

The system activates in the mornings when the Sun comes out. The SMA bars can be turned inwards, which orient this panel towards the east to gain increased sunshine.

The Fig.1 represents the panel position during the morning (6:00 AM – 12:00 PM) when SMA-1 and SMA-2 contract by 2 cm, tilting the panel 45°C eastward to face the rising Sun.The SMAs warm to 40–60°C, and the aluminum plate heats to 45–65°C. The contraction lasts 1–2.5 hours, while the plates gradually warm over 30–50 minutes. SMA-3 and SMA-4 remain inactive as they face west and are not exposed to direct sunlight in the morning

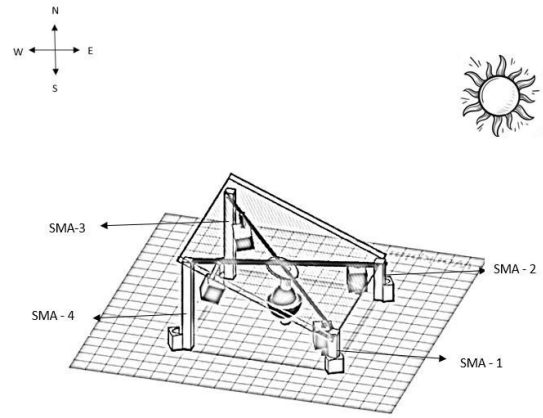

Fig. 1. Solar tracker pointing in the morning

G. Solar Tracking Phase in the Afternoon (12:00 PM - 4:00 PM)

In the afternoon, the system remains at a constant posture. The SMA bars do not move, thus the panels attain energy effectively without excessive heating.

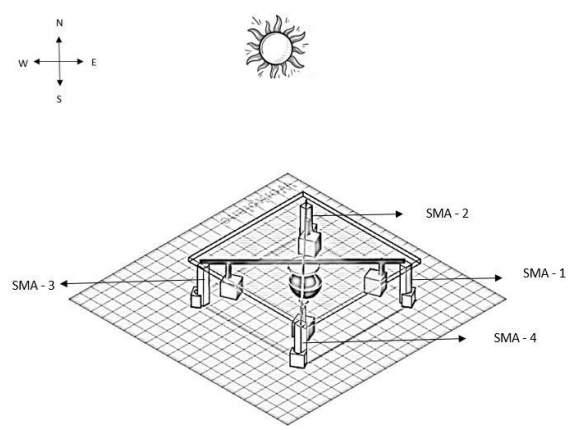

Fig. 2. Solar tracker pointing in the afternoon

The Fig.2 represents the panel position during the afternoon (12:00 PM – 4:00 PM) when all SMAs remain inactive, keeping the panel flat at 0°as sunlight falls directly on it. The SMA temperature ranges from 50–70°C, with the aluminum plate between 55–70°C. No contraction occurs, and heat is distributed evenly to prevent localized overheating. The system remains stable and absorbs maximum solar energy during peak hours.

H. Solar Tracking Phase in the Evening (4:00 PM - 7:00 PM)

The SMA bars begin to loosen, at a slow pace, as the sun sets. returning the panel to the neutral position. This transition assists the system to prepare to the subsequent cycle. The Fig.3 represents the angle at night (4:00 PM - 7:00 PM) when SMA-3 and SMA-4 begin to shrink as the light is directed

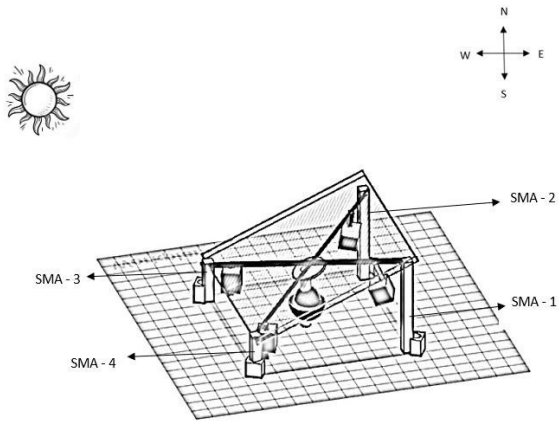

Fig. 3. Solar tracker pointing in the evening

towards the west thus gradually tilting the panel towards the west. Meanwhile, SMA-1 and SMA-2 relax since they are not directly exposed to the sun. The SMAs are 40-60°C and the aluminum plate is 45-65°C. Shrinking takes 1-2 hours hence the panel is positioned at the setting sun. This allows the panel to obtain maximum solar energy before the fall of the sun.

I. Solar Tracking Phase in the Night (7:00 PM - 6:00 AM)

The SMA bars begin to loosen, at a slow pace, as the sun sets. returning the panel to the neutral position. This transition assists the system to prepare to the subsequent cycle.

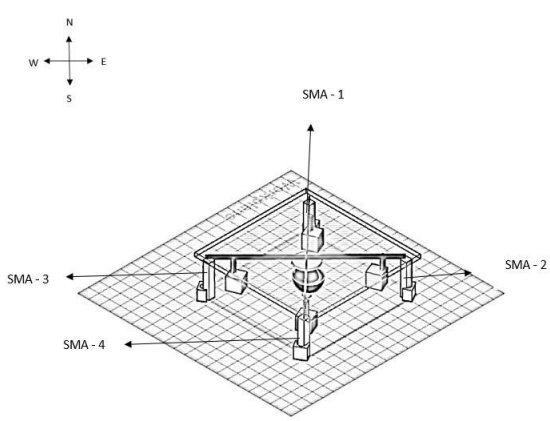

Fig. 4. Solar tracker pointing in the night

The Fig.4 represents the panel position during the evening (4:00 PM – 7:00 PM) when SMA-3 and SMA-4 begin to contract as sunlight is directed from the west, gradually tilting the panel toward the west. During this period, SMA-1 and SMA-2 remain relaxed as they are no longer exposed to direct sunlight. SMA temperatures range from 40-60°C, while aluminum plate temperatures vary between 45-65°C. The contraction takes 1–2 hours, allowing the panel to align with the setting Sun and capture maximum solar energy before sunset.

J. Materials Used

- **Solar Panel** – Converts sunlight into electricity.
- **Black Anodized Aluminum Plate** – Absorbs more heat and causes the SMA to move.
- **Shape Memory Alloy (Nitinol)** – Expands and contracts in response to heat, enabling panel movement.
- **Ball Joint Mechanism** – Allows the panel to move in a wide variety of directions.
- **Counterweights** – Balance the forces to enable smooth movement.
- **Ceramic and Thermal-Resistant Coating** – Improves durability and enhances the effective functioning of the SMA.
- **Support Columns and Base** – Provide stability to the entire system.

K. Experimental Setup

The experiment consists of a solar panel on a ball joint to allow it to move in lots of directions. Four anodized aluminum plates are attached to the corners and heat nitinol SMA strips to move panel to optimal sun angle. The SMA and components are covered with ceramic and thermal resistant finishes, whereby heat is evenly distributed and the system is stable. Even when the wind alters, the panel is held moving by counterweights.

The panel angle, SMA temperature and sunlight are monitored by sensors during the test. The system is configured at varying light conditions to observe the speed at which the system reacts, the accuracy of tracking and the amount of heat the system absorbs. The statistics indicate that the mechanism is effective and can be utilised.

V. Phase Transformation Energy Calculations

A. Heat Absorption by Black Anodized Aluminium Plate

Normal aluminum has an ability to absorb only 30–40% of sunlight whereas black anodized aluminum can absorb up to 85–90%. The amount of heat which the plate absorbs is given by this calculation:

$$Q = A \times S \times \alpha$$

where:
$A =$ Surface area of the aluminium plate (in square metres).
$S =$ Solar light intensity (about 1000 watts per square metre at noon).
$\alpha =$ Absorptivity of black anodized aluminium (0.90).

B. Heat Transfer to SMA

The heat moves from the aluminium plate to the shape-memory alloy mainly by conduction. It can be described as:

$$Q = \frac{k \times A \times \Delta T}{d}$$

where:
$k =$ Heat-conduction ability of aluminium (237 watts per metre-degree).

$A =$ Contact surface area (in square metres).
$\Delta T =$ Temperature difference between the plate and the SMA (in degrees).
$d =$ Plate thickness (in metres).

Since the plate is enclosed in the heat-resistant material with ceramic, the material has slightly reduced effective heat-conduction capacity. That assists to distribute the heat and avoids hot areas.

C. SMA Expansion and Contraction for Solar Panel Tilt

When SMA strip gets hot, length changes and this can be expressed as:

$$\Delta L = L_0 \times \varepsilon$$

where:
$L_0 =$ Original length of the SMA strip (in metres).
$\varepsilon =$ Thermal strain due to heating (typically 58 percent).

The solar panel can be tilted at an angle θ which can be estimated with the help of simple trigonometry:

$$\theta = \tan^{-1}\left(\frac{\Delta L}{H}\right)$$

where:
$H =$ height on which the SMA will be positioned above the pivot (in metres).

VI. Data Acquisition and Graphical Insights

TABLE I
HEAT ABSORPTION BY BLACK ANODIZED ALUMINIUM

Time (hrs:mins)	Plate 1 (W)	Plate 2 (W)	Plate 3 (W)	Plate 4 (W)	Total Heat Absorbed (W)
06:00 – 08:00	72.0	72.0	45.0	45.0	234.0
08:00 – 10:00	90.0	90.0	63.0	63.0	306.0
10:00 – 12:00	108.0	108.0	108.0	108.0	432.0
12:00 – 14:00	108.0	108.0	108.0	108.0	432.0
14:00 – 16:00	63.0	63.0	90.0	90.0	306.0
16:00 – 18:00	45.0	45.0	72.0	72.0	234.0
18:00 – 06:00	0.0	0.0	0.0	0.0	0.0

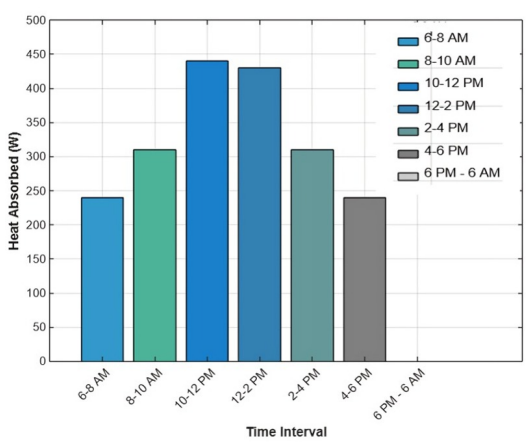

Fig. 5. Heat Absorption by Black Anodized Aluminum Plates throughout the Day

TABLE II
SMA EXPANSION AND CONTRACTION FOR SOLAR PANEL TILT

Time (hrs:mins)	SMA 1	SMA 2	SMA 3	SMA 4	Avg. L (m)	Tilt (°)
06:00–08:00	0.00525	0.00525	0.00262	0.00262	0.00394	0
08:00–10:00	0.00700	0.00700	0.00437	0.00437	0.00569	45
10:00–12:00	0.01050	0.01050	0.01050	0.01050	0.01050	90
12:00–14:00	0.01050	0.01050	0.01050	0.01050	0.01050	90
14:00–16:00	0.00437	0.00437	0.00700	0.00700	0.00569	135
16:00–18:00	0.00262	0.00262	0.00525	0.00525	0.00394	180
18:00–06:00	0.00000	0.00000	0.00000	0.00000	0.00000	180

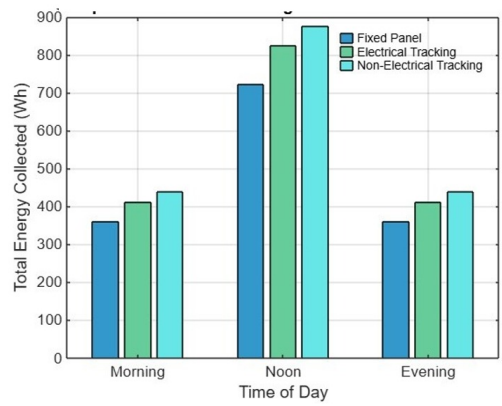

Fig. 6. Comparison of Solar Tracking Methods at Different Times

TABLE III
HEAT TRANSFER TO SMA (NITINOL)

Time (hrs:mins)	SMA 1 (Q W)	SMA 2 (Q W)	SMA 3 (Q W)	SMA 4 (Q W)	Total Heat Transfer (W)
06:00–08:00	330,000.0	330,000.0	330,000.0	330,000.0	1,320,000.0
08:00–10:00	440,000.0	440,000.0	440,000.0	440,000.0	1,760,000.0
10:00–12:00	550,000.0	550,000.0	550,000.0	550,000.0	2,200,000.0
12:00–14:00	550,000.0	550,000.0	550,000.0	550,000.0	2,200,000.0
14:00–16:00	440,000.0	440,000.0	440,000.0	440,000.0	1,760,000.0
16:00–18:00	330,000.0	330,000.0	330,000.0	330,000.0	1,320,000.0
18:00–06:00	0.0	0.0	0.0	0.0	0.0

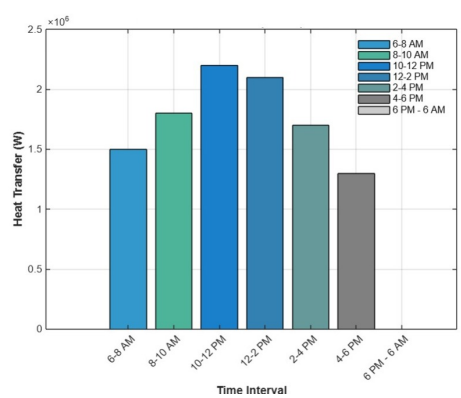

Fig. 7. Heat Transfer to SMA (Nitinol) over Time

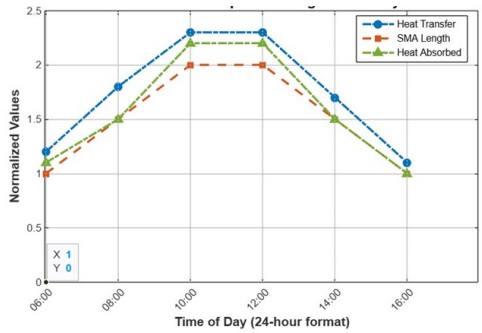

Fig. 8. Comparison of Heat Transfer and SMA Length Change with Heat Absorption throughout the Day

VII. Results And Discussion

A. Movement Behavior of the Panel:

The solar panel moves due to the variation of temperature of the SMA. The ball-joint allows it to move in numerous directions, therefore it tracks the sun throughout the day. We found it slides freely with minimum resistance. Counterweights keep it on the straight and prevent it to overshoot and wobble in heavy wind. But as all passive systems, you are bound to check and re-adjust it when you install it, particularly where the weather varies considerably.

Comparison of bar charts in Fig.9 compares the proposed solar tracking system with the available systems in different parameters:

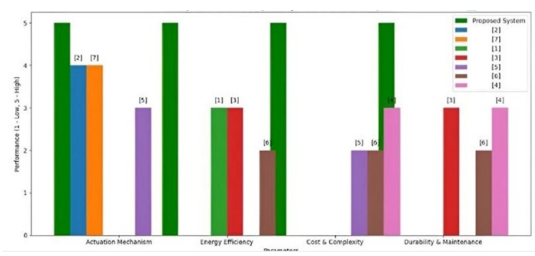

Fig. 9. Comparison between Proposed System and Research Papers

Experimental work and analysis indicate that this tracking system is able to capture a great deal of energy compared to a fixed panel. It consumes less energy and requires less maintenance because it contains no motors or electronics. This system lasts long and is easy and can be adapted to various locations. Sustainable materials also aid the world renewable-energy ambitions.

B. Feasibility for Real-Time Application

The suggested system can be used in real-time particularly in an off-grid or remote areas where the trackers cannot operate due to power constraints. The panel is more reliable and has longer life because the heat is used to move it rather than electronics. As it is further upgraded, as an IoT tracker and capable of being scaled to large arrays, and resistant to extreme weather, this tracking mechanism is a viable and eco-friendly means to increase the production of solar energy.

VIII. Conclusion

This paper demonstrates a solar tracker based on SMA that employs plates of black anodized aluminum. These plates conduct more heat than normal aluminum and the SMA reacts quicker, and the panel tracks the Sun without a motor. Further enhancements may involve electronic feedback to track accurately, and IoT and sensors to make real-time weather adjustments and special coating to fit various climates to enhance local performance and lifespan. The purpose of such changes is to increase energy efficiency and make the system reliable under numerous conditions.

References

[1] A. Y. Alhaddad, H. H. Ahmed, M. K. Elhassan, and N. A. Abu Ali, "Characterization of water-controlled shape memory alloys for solar tracking applications," *Discover Appl. Sci.*, vol. 5, 2024.

[2] N. Osman and N. G. Hariri, "Thermal investigation and optimized design of a novel solar self-driven thermomechanical actuator," *Sustainability*, vol. 14, no. 9, 2022.

[3] A. Riad, M. Benzohra, M. Mansouri, and A. Alhamany, "Design of sunflower system based on shape memory alloy actuator," in *Lect. Notes Real-Time Intell. Syst.*, Springer, pp. 45–54, 2018.

[4] A. S. Qureshi *et al.*, "4D-printed shape memory polymer based solar tracker," in *Proc. IEEE Int. Conf. Emerg. Smart Comput. Informatics (ESCI)*, 2025.

[5] M. Azad and Y. Zhou, "Design of a high-concentration microtracking photovoltaic system," *J. Mech. Robot.*, vol. 11, no. 6, pp. 065001–1–065001–9, 2019.

[6] J. Liu, L. Cui, Y. Zhong, and R. Y. Wu, "Data-driven study of shape memory behavior of multi-component Ni–Ti alloys in large compositional and processing space," *Shape Mem. Superelasticity*, vol. 8, pp. 455–472, 2022.

[7] A. Sharma and V. Kumar, "Artificial neural network for performance modelling of shape memory alloy Nitinol alloy," *Int. J. Interact. Des. Manuf.*, 2025.

[8] H. G. Altuntas, A. S. Ercetin, and S. Saritas, "Classification of the shape memory alloys production techniques and application fields," *Eur. Phys. J. Plus*, vol. 134, no. 5, 2019.

[9] S. Miyazaki, Y. Kimura, and H. Tobushi, "Frontiers of theoretical research on shape memory alloys," *Shape Mem. Superelasticity*, vol. 4, pp. 324–336, 2018.

[10] Y. Liu and A. M. Lin, *Advances in Shape Memory Materials*, Springer Ser. Mater. Sci., vol. 232, 2017.

[11] S. Park and D. Hwang, "An experimental study on precision positioning characteristics of shape memory alloy actuator," *Microsyst. Technol.*, vol. 26, pp. 3701–3711, 2020.

[12] T. Kamps *et al.*, "Development of a self-regulating solar shading actuator based on the thermal shape memory effect," *Machines*, vol. 11, no. 3, 2023.

[13] V. P. Vijayakumar, V. T. Raj Kumar, and P. Ramkumar, "Study of heat pipes in solar collectors using nano fluids," *International Journal of Scientific Research in Science and Technology (IJSRST)*, vol. 2, no. 5, pp. 115–119, Sept.–Oct. 2016.